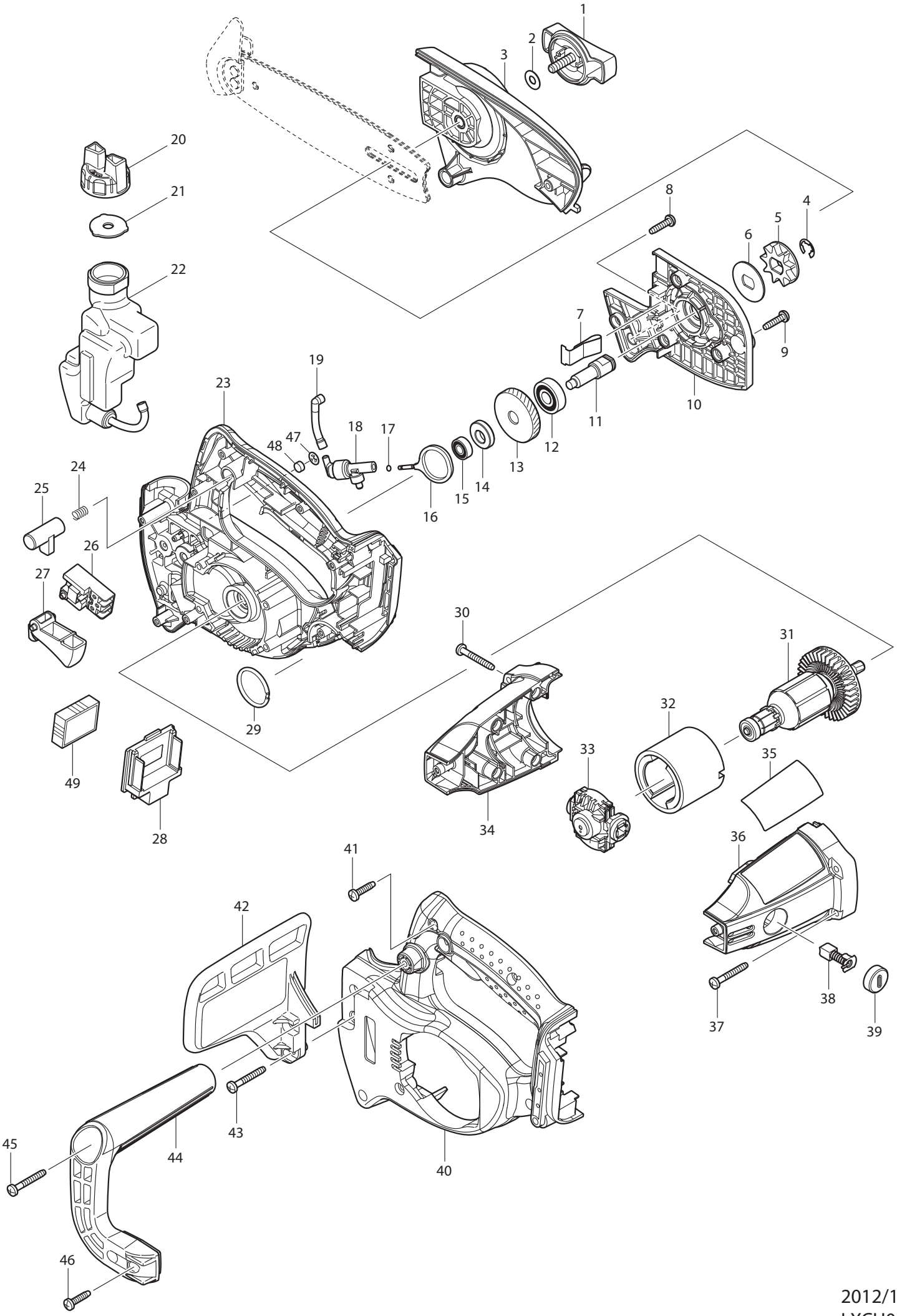

2012/11
LXCU01