Modelo HP331D CORDLESS HAMMER DRIVER DRILL

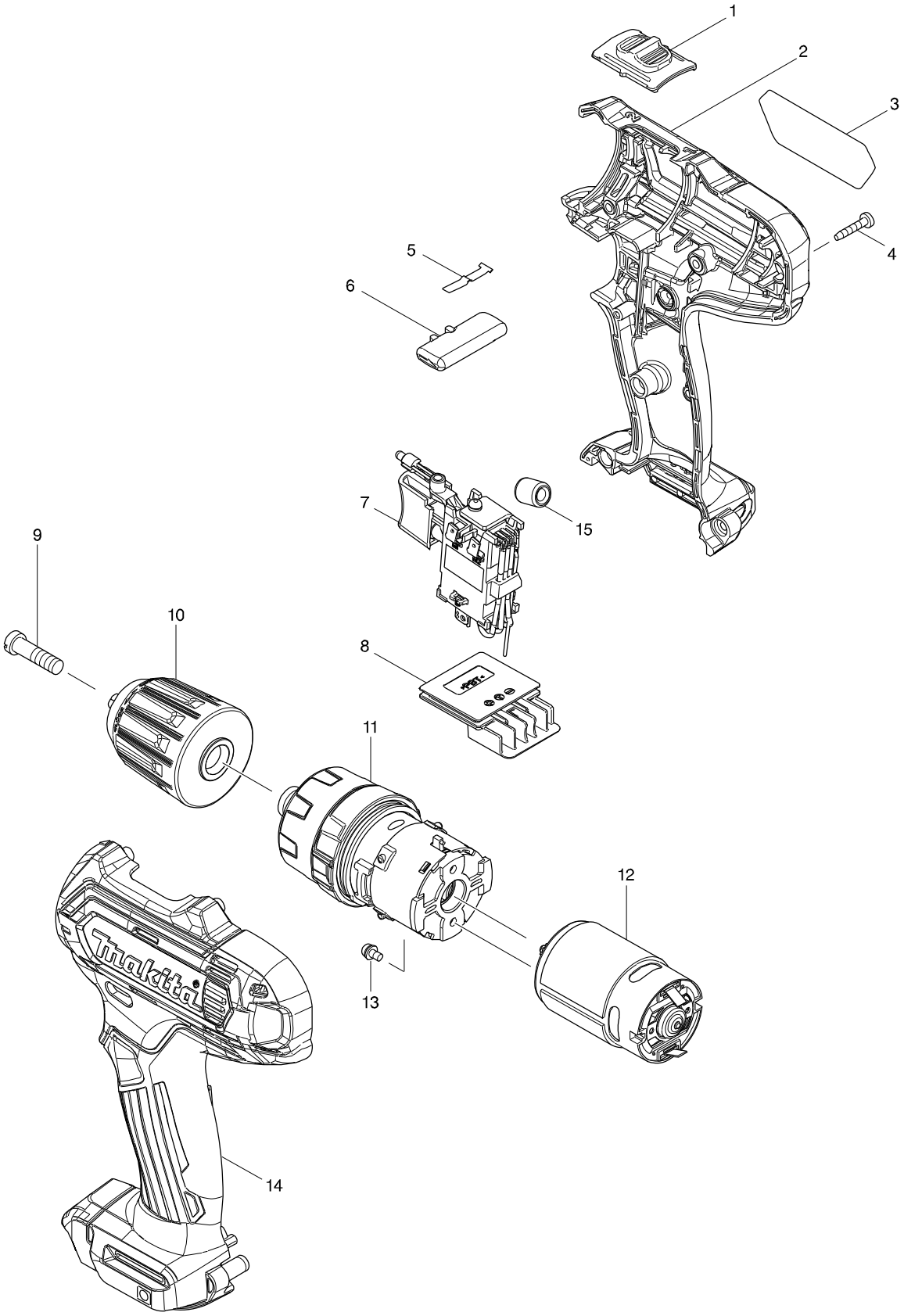

Modelo HP331D CORDLESS HAMMER DRIVER DRILL

Artículo	Código	Descripción	Interc	Cantidad	N/O	Opción 1	Opción 2	Notas
001	126233-0	PALANCA CAMBIO HP330		1				
C10	231433-0	MUELLE COMP.4		2				
002	183B50-3	HOUSING SET		1				
C10	252126-6	HEX. LOCKING NUT M4-7		2				
D10		INC. 14						
003	851H13-0	HP331D NAME PLATE		1				
004	266429-2	TORNILLO M3X16 TD0101F		9				
005	232239-9	HOJA MUELLE DF030D		1				
006	456039-5	F/R CHANGE LEVER		1				
007	632F42-8	SWITCH UNIT		1	*			
C10	620463-0	LED CIRCUIT		1	*			
C20	632F65-6	LINE FILTER UNIT		1	*			
007-1	632J76-5	SWITCH UNIT	<	1				
C10	620625-0	LED CIRCUIT		1				
C20	632F65-6	LINE FILTER UNIT		1	*			
C21	688161-2	FILTRO DE LINEA DA312/392	<	1				
008	644813-5	TERMINAL		1				
009	251468-5	TORNILLO IDQUI M6X22* MT064		1				
010	763229-6	KEYLESS DRILL CHUCK 10		1				
011	123502-0	GEAR ASS'Y		1				
012	629167-1	DC MOTOR		1				
013	911003-8	TORNILLO M3X6 PARA 6096DW		2				
014	183B50-3	HOUSING SET		1				
C10	252126-6	HEX. LOCKING NUT M4-7		2				
D10		INC. 2						
015	688164-6	FILTRO DE LINEA 6940D		1	*			
015-1	632F65-6	LINE FILTER UNIT	<	1				
C10	688164-6	FILTRO DE LINEA 6940D		1				
A01	251314-2	TORNILLO M4X12*		1				
A02	346909-5	HOOK		1				
A03	784244-7	+ BIT 2-50		1				
A04B	456128-6	BATTERY COVER		1				
A05B	***DC10SA	DC10SA BATTERY CHARGER		1				
D10		COMPO-PARTS						
A06B	197394-3	BATTERY BL1020B SET		2				
A07B	821661-1	PLASTIC CARRYING CASE		1				
C10	417724-5	CIERRE PARA MALETIN TRANSPORTE		2				