Modelo M9201 FINISHING SANDER

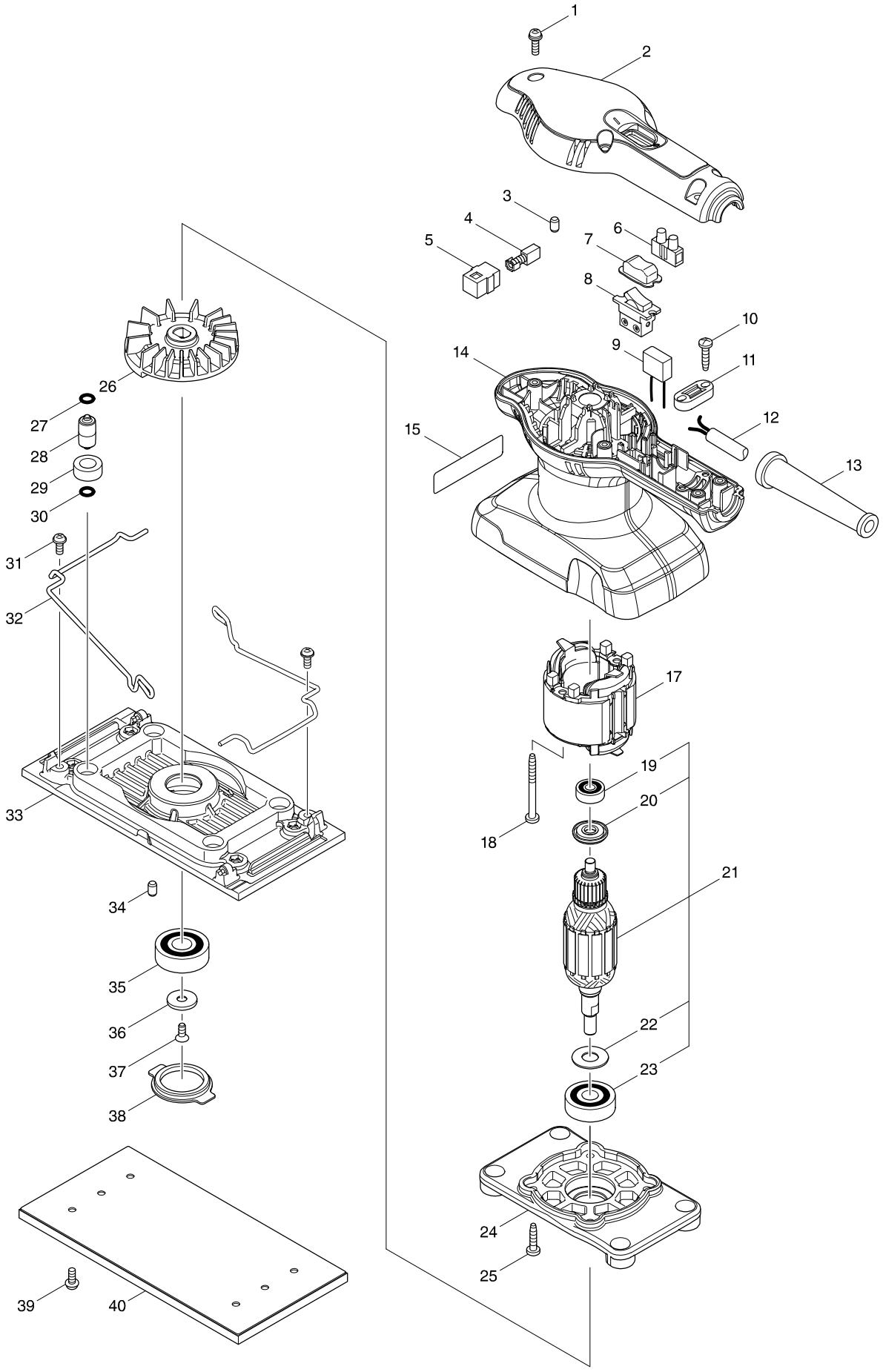

Modelo M9201 FINISHING SANDER

Pieza	Código	Descripción	Info	CTD.	N/O	Opc. 1	Opc. 2	OBS.
001	265099-4	PAN HEAD SCREW M4X14		4				
002	450455-3	TOP COVER		1				
003	263002-9	RUBBER PIN 4		2				
004	194971-2	CARBON BRUSH CB-75		1				
005	643552-4	BRUSH HOLDER 5-8		2				
007	424086-4	SWITCH COVER		1				
008	651527-9	SWITCH		1				
010	266326-2	TAPPING SCREW 4X18		2				
011	687123-7	STRAIN RELIEF		1				
012	664881-2	POWER SUPPLY CORD #18-2-2.0		1				
013	682569-2	CORD GUARD 8-85		1				
014	455923-1	MOTOR HOUSING		1				
015	851A57-8	M9201 NAME PLATE		1				
017	593666-8	FIELD ASS'Y 115V		1				
C10	654037-5	INSULATED TERM. FT1.25-M3		2				
018	266425-0	TAPPING SCREW 4X45		2				
019	210028-2	BALL BEARING 606ZZ		1				
020	681675-0	INSULATION WASHER		1				
021	510253-8	ARMATURE ASS'Y 115V		1				
D10		INC. 19,20,22,23						
022	253180-3	FLAT WASHER 10		1				
023	211087-9	BALL BEARING 6200DDW		1				
024	450457-9	BEARING BOX		1				
025	266326-2	TAPPING SCREW 4X18		4				
026	241672-4	FAN 68		1				
027	213983-7	O RING 4		4				
028	318151-8	FOOT		4				
029	424023-8	SPONGE SLEEVE 9		4				
030	213983-7	O RING 4		4				
031	266455-1	+PAN HEAD SCREW M4X12		2				
032	324873-0	LEVER		2				
033	450458-7	BASE		1				
034	263002-9	RUBBER PIN 4		1				
035	211145-1	BALL BEARING 6201ZZ		1				
036	267349-3	FLAT WASHER 6		1				
037	265175-4	+ COUNTERSUNK HEAD SCREW M4X		1				
038	424087-2	CAP 33		1				
039	265142-9	+ PAN HEAD SCREW M4X10		4				
040	158595-8	PAD COMPLETE		1				

Por favor pedir piezas por los códigos.

Fecha de impresión. 07/06/2016