Modelo HG6031V HEAT GUN

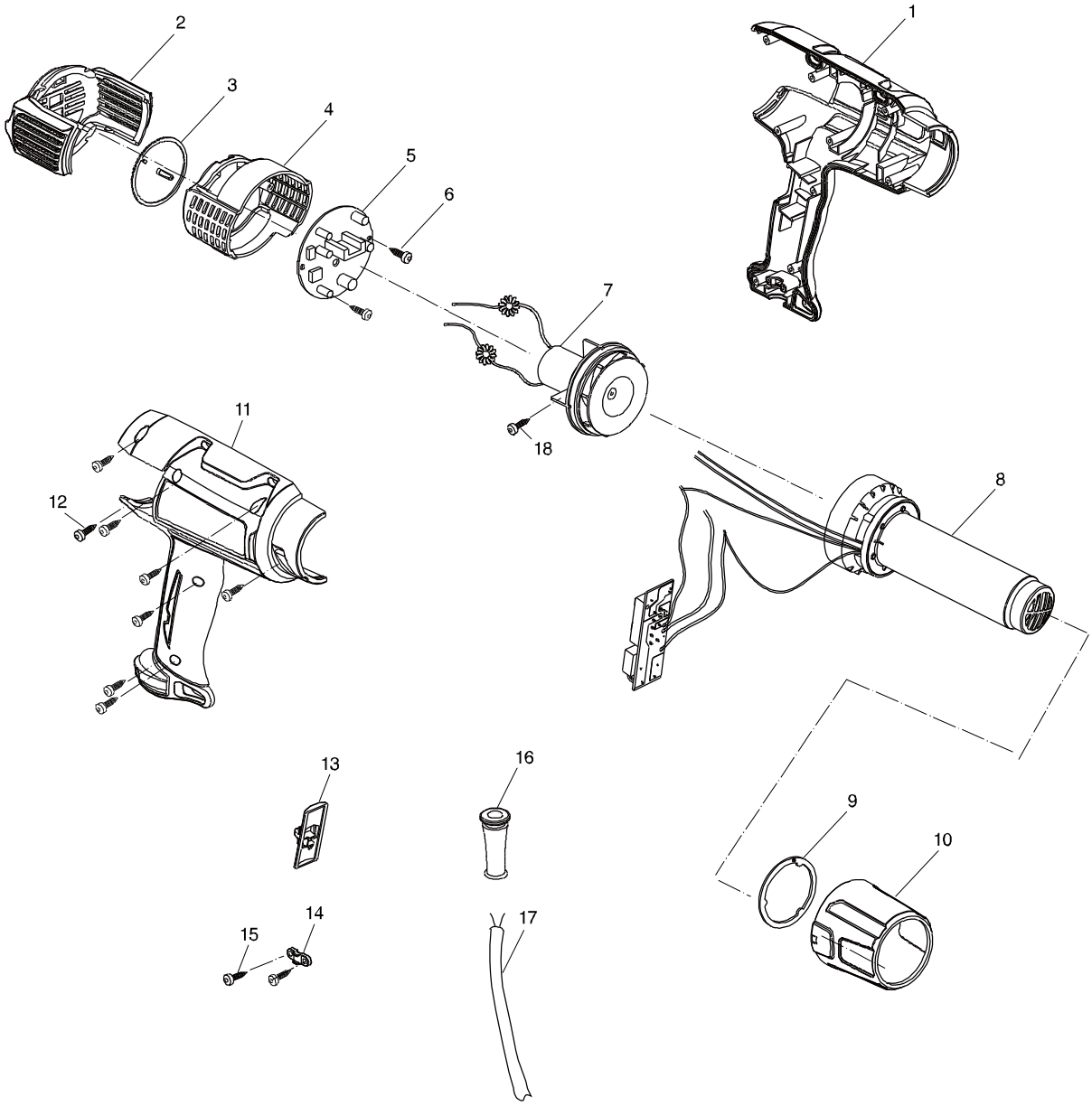

Modelo HG6031V HEAT GUN

Pieza	Código	Descripción	Info	CTD.	N/O	Opc. 1	Opc. 2	OBS.
001	PR00000015	HOUSING LEFT		1				
002	PR00000016	REAR COVER		1				
003	PR00000017	HEATER CONTOROLL DIAL		1				
004	PR00000018	REAR HOUSING		1				
005	PR00000051	CONTROLLER 120V		1				
006	PR00000020	TAPPING SCREW		2				
007	PR00000052	MOTOR ASSEMBLY 120V		1				
008	PR00000053	HEATER & SWITCH ASSY 120V		1				
009	PR00000011	SUPPORT RING		1				
010	PR00000010	FRONT COVER COMPLETE		1				
011	PR00000023	HOUSING RIGHT		1				
012	PR00000004	TAPPING SCREW		8				
013	PR00000005	SWITCH COVER		1				
014	PR00000006	CORD CLAMP		1				
015	PR00000007	TAPPING SCREW		2				
016	PR00000008	CORD GUARD		1				
017	PR00000054	POWER SUPPLY CORD		1				
018	PR00000007	TAPPING SCREW		1				
A01	PR00000028	GLASS PROTECTION NOZZLE		1				
A02	PR00000029	WIDE-SLOT NOZZLE		1				
A03	PR00000030	REFLECTOR NOZZLE		1				
A04	PR00000031	REDUCTION NOZZLE 20mm		1				
A05	PR00000032	OVERLAP WELDING NOZZLE		1				
A06	PR00000033	SOLDER SLEEVES REFLECTOR		1				
A07	PR00000034	WELDING NOZZLE		1				
A08	PR00000035	PRESSURE ROLLER		1				
A09	PR00000036	WELDING RODS (ABS)		1				
A10	PR00000037	WELDING RODS (HDPE)		1				
A11	PR00000038	WELDING RODS (PP)		1				
A12	PR00000039	SPEED WELDING NOZZLE		1				
A13	PR00000040	SCRAPER		1				
A14	PR00000041	SCRAPER SET		1				
A15	PR00000042	SCRAPER		1				

Por favor pedir piezas por los códigos.

Fecha de impresión. 01/08/2018