MX

Diagram / Parts List

DJN161

1.6MM CORDLESS NIBBLER

2020/03

(MX) DJN161 / 1.6MM CORDLESS NIBBLER

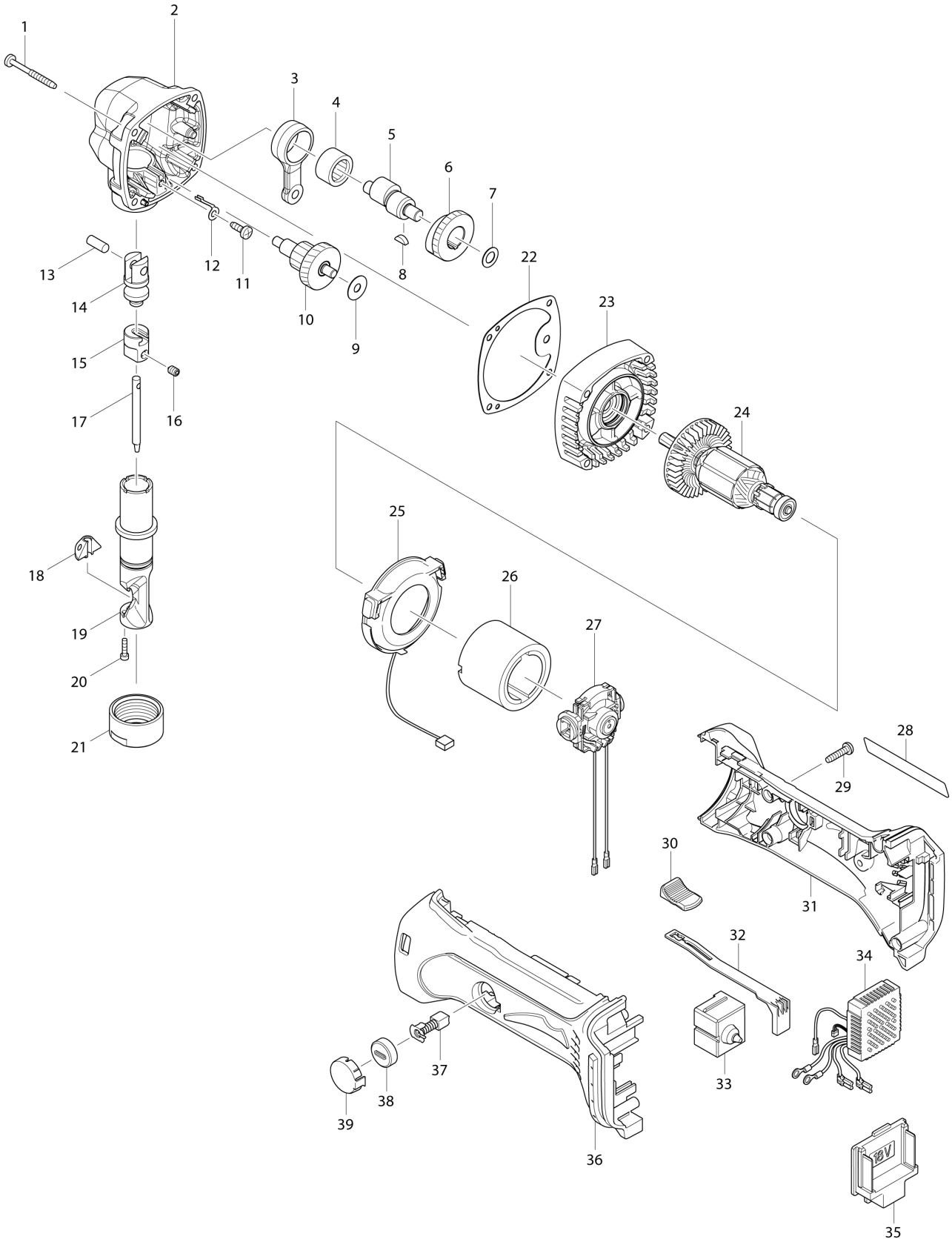

MX	MEXICO

DJN161 / 1.6MM CORDLESS NIBBLER

Item	Sub	Parts No.	Parts Description	Qty	I/C	E/C No.	Close No.	Remark
001		266048-4	TAPPING SCREW 4X40	4				
002		141878-3	GEAR HOUSING COMPLETE	1				
	C10	800P78-7	INDICATION LABEL	1				
003		331438-1	ROD	1				
004		212222-2	NEEDLE BEARING 1612	1				
005		326249-7	CRANK SHAFT	1				
006		227314-4	SPUR GEAR 31	1				
007		253215-0	FLAT WASHER 8	1				
008		254002-0	WOODRUFF KEY 3	1				
009		267133-6	FLAT WASHER 6	1				
010		226158-9	GEAR COMPLETE 16-36	1				
011		266026-4	TAPPING SCREW BIND CT 4X12	1				
012		344116-4	STOPPER	1				
013		256111-1	PIN 6	1				
014		322703-9	RAM	1				
015		322702-1	PUNCH HOLDER	1				
016		265880-3	H.S.SET SCREW(CONE POINT)M5X8	1				
017		A-83951	PUNCH	1				
018		A-15051	DIE	1				
019		322701-3	DIE HOLDER	1				
020		266080-8	HEX. SOCKET HEAD BOLT M3X12	2				
021		322748-7	LOCK NUT	1				
022		442191-5	GASKET	1				
023		141877-5	GEAR HOUSING COVER COMPLETE	1				
	C10	213961-7	O RING 22	1				
024		619312-6	ARMATURE	1				
025		631714-6	LED CIRCUIT	1				
026		638627-2	YOKE UNIT	1				
027		638448-2	ENDBELL COMPLETE	1				
028		815T00-5	DJN161 NAME PLATE	1				
029		265995-6	TAPPING SCREW 4X18	5				
030		419566-3	SWITCH KNOB	1				
031		187758-9	HOUSING SET	1				
	C10	263005-3	RUBBER PIN 6	2				
	C20	810545-8	CAUTION LABEL	1				
	D10		INC. 36					
032		419519-2	SWITCH LEVER	1				
033		650579-7	SWITCH 1246.3223	1				
034		620243-4	CONTROLLER	1				
035		644808-8	TERMINAL	1				
036		187758-9	HOUSING SET	1				
	C10	263005-3	RUBBER PIN 6	2				
	C20	810545-8	CAUTION LABEL	1				
	D10		INC. 31					
037		195018-5	CARBON BRUSH SET CB-430	1				
038		643929-3	BRUSH HOLDER CAP	2				
039		419518-4	HOLDER CAP COVER	2				
A01		781028-4	WRENCH 32	1				
A02		783208-8	HEX. WRENCH 2.5	1				

Interchange
O : Yes
X : No
< : the new part can be substituted for the current.
> : the current part can be substituted for the new.
S : Interchangeable as a set.