MX	MEXICO

Diagram / Parts List

TW202D

CORDLESS IMPACT WRENCH

2023/11

(MX) TW202D / CORDLESS IMPACT WRENCH

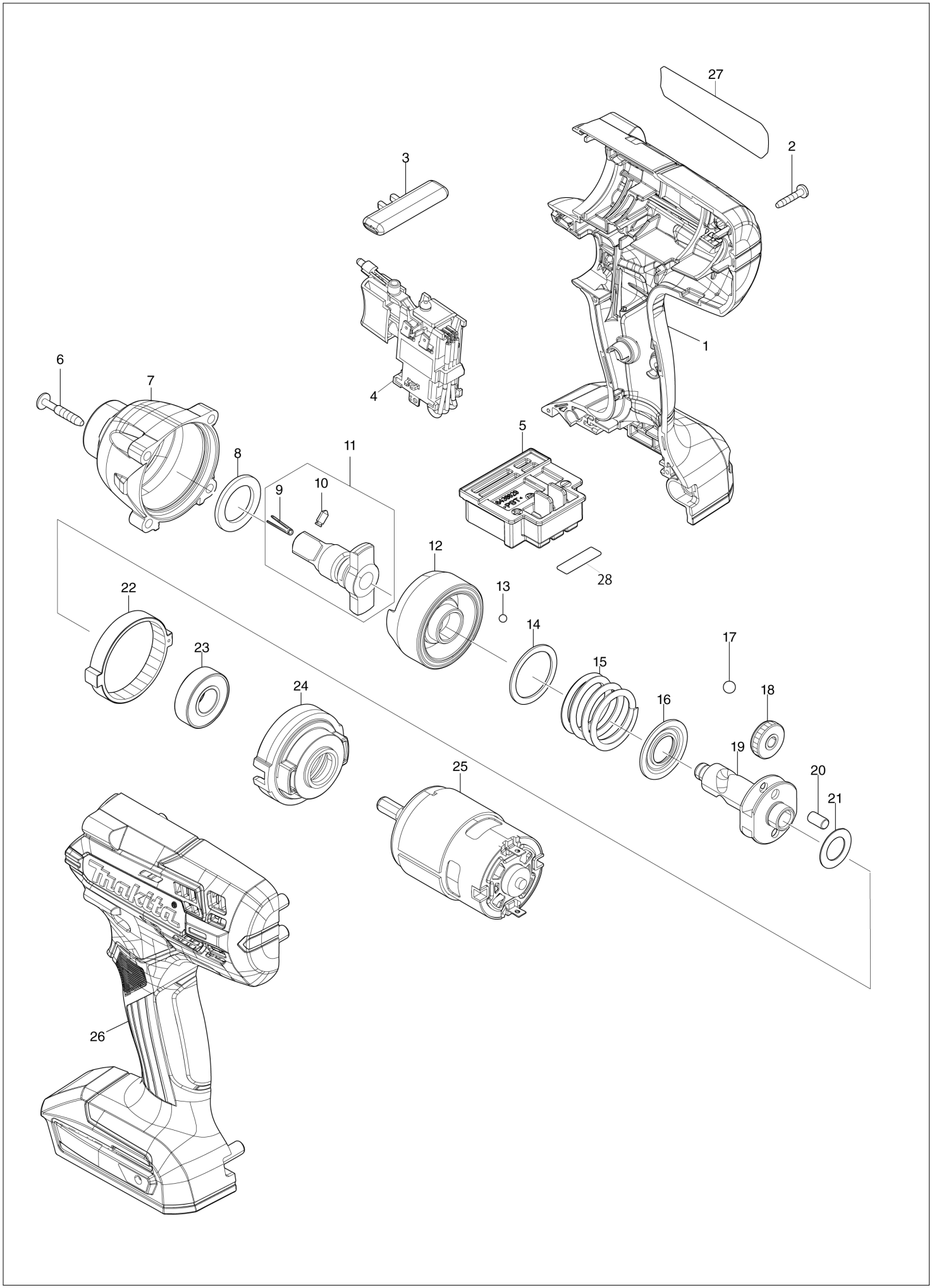

MX	MEXICO

TW202D / CORDLESS IMPACT WRENCH

Item	Sub	Parts No.	Parts Description	Qty	I/C	E/C No.	Close No.	Remark
001		183X47-4	HOUSING SET	1				
	C10	252126-6	HEX. LOCK NUT M4-7	2				
	D10		INC. 26					
002		266429-2	TAPPING SCREW 3X16	8				
003		452399-3	F/R CHANGE LEVER	1				
004		632U41-0	SWITCH UNIT	1				
005		643862-9	TERMINAL	1				
006		266374-1	TAPPING SCREW 4X25	4				
007		141M84-8	HAMMER CASE COMPLETE	1				
008		261151-6	NYLON WASHER 19	1				
009		322045-1	CLIP	1				
010		323675-1	PIN 4	1				
011		136927-9	ANVIL A ASSEMBLY	1				
	D10		INC. 9,10					
012		326110-8	HAMMER	1				
013		216040-0	STEEL BALL 3.5	24				
014		267175-0	FLAT WASHER 24	1				
015		233430-2	COMPRESSION SPRING 24	1				
016		267766-7	CUP WASHER 14	1				
017		216041-8	STEEL BALL 5.6	2				
018		227362-3	SPUR GEAR 22	2				
019		326109-3	SPINDLE	1				
020		256253-1	PIN 5	2				
021		267212-0	FLAT WASHER 12	1				
022		227279-0	INTERNAL GEAR 51	1				
023		210107-6	BALL BEARING 6001ZZ	1				
024		453056-6	INTERNAL GEAR CASE	1				
025		629195-6	DC MOTOR	1				
026		183X47-4	HOUSING SET	1				
	C10	252126-6	HEX. LOCK NUT M4-7	2				
	D10		INC. 1					
027		8586M3-3	TW202D NAME PLATE	1				
028		8586M7-5	TW202D SERIAL NO. LABEL	1				
A01B		161464-4	SHOULDER STRAP	1				
A02B		197940-2	TOOL HANGER SET	1			DP542	
	C10	266622-8	+ TRUSS HEAD SCREW M4X12	2			DP542	
A02-1B		347075-1	TOOL CATCHER	1	S	DP542		
A03B		452652-7	BATTERY COVER	1				
A04B		191N69-0	BATTERY BL1820G SET	2				
A05B		***DC18WB	DC18WB BATTERY CHARGER	1				
	D10		COMPO-PARTS					
A06B		821909-1	PLASTIC CARRYING CASE	1				
	C10	455522-9	SLIDE LATCH	2				
A10B		266622-8	+ TRUSS HEAD SCREW M4X12	2	S	DP542		
B01B		197940-2	TOOL HANGER SET	1		DP542		
	D10		INC. A02, A10			DP542		
D01		638A83-2	LEAD UNIT	1		DP847		
D02		638A84-0	LEAD UNIT	1		DP847		
F01		195779-7	HOOK SET	1		Y09179		

A:TW202DZ(N)
B:TW202D001(L)

Interchange
O : Yes
X : No
< : the new part can be substituted for the current.
> : the current part can be substituted for the new.
S : Interchangeable as a set.