MX	MEXICO

Diagram / Parts List

SK105GD

CORDLESS GREEN CRSS LINE LASER

2021/01

(MX) SK105GD / CORDLESS GREEN CRSS LINE LASER

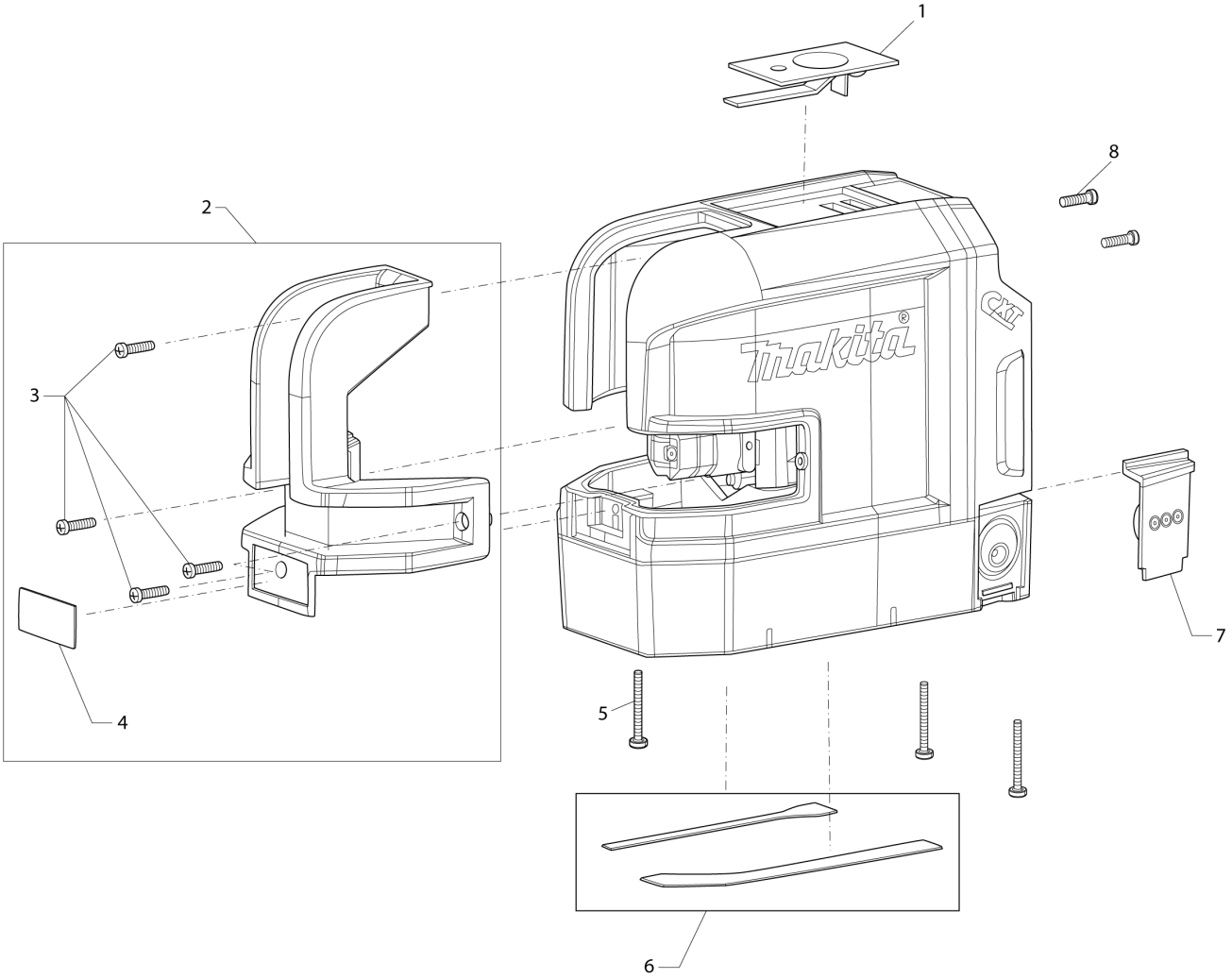

MX	MEXICO

SK105GD / CORDLESS GREEN CRSS LINE LASER

Item	Sub	Parts No.	Parts Description	Qty	I/C	E/C No.	Close No.	Remark
001		LE00899153	KEYPAD GREEN	1				
002		LE00870262	WINDOW FRAME SET.(SK105GD)	1				
	D10		INC. 3,4					
003		LE00899157	SCREW(10PCS.)	1				
004		LE00855685	FRONT LABEL(SK105GD)	1				
005		LE00899156	SCREW FOR BOTTOM HOUSING(10P)	1				
006		LE00870260	BASE LABEL SET	1				
007		LE00873680	DC JACK COVER	1				
008		LE00899157	SCREW(10PCS.)	1				
A01		LE00855012	L-ADAPTER	1		Y08109	Y08119	
A01-1		LE00870131	L-ADAPTER	1	<	Y08119		
A02		LE00864505	HOLSTER	1		Y08121		
A03		LE00823195	TARGET PLATE GREEN	1		Y08121		
A04		LE00772796	LASER VISIBILITY GLASSESS	1		Y08121		

Interchange
O : Yes
X : No
< : the new part can be substituted for the current.
> : the current part can be substituted for the new.
S : Interchangeable as a set.