MX	MEXICO

Diagram / Parts List

DP4020

13MM DRILL

2024/09

(MX) DP4020 / 13MM DRILL

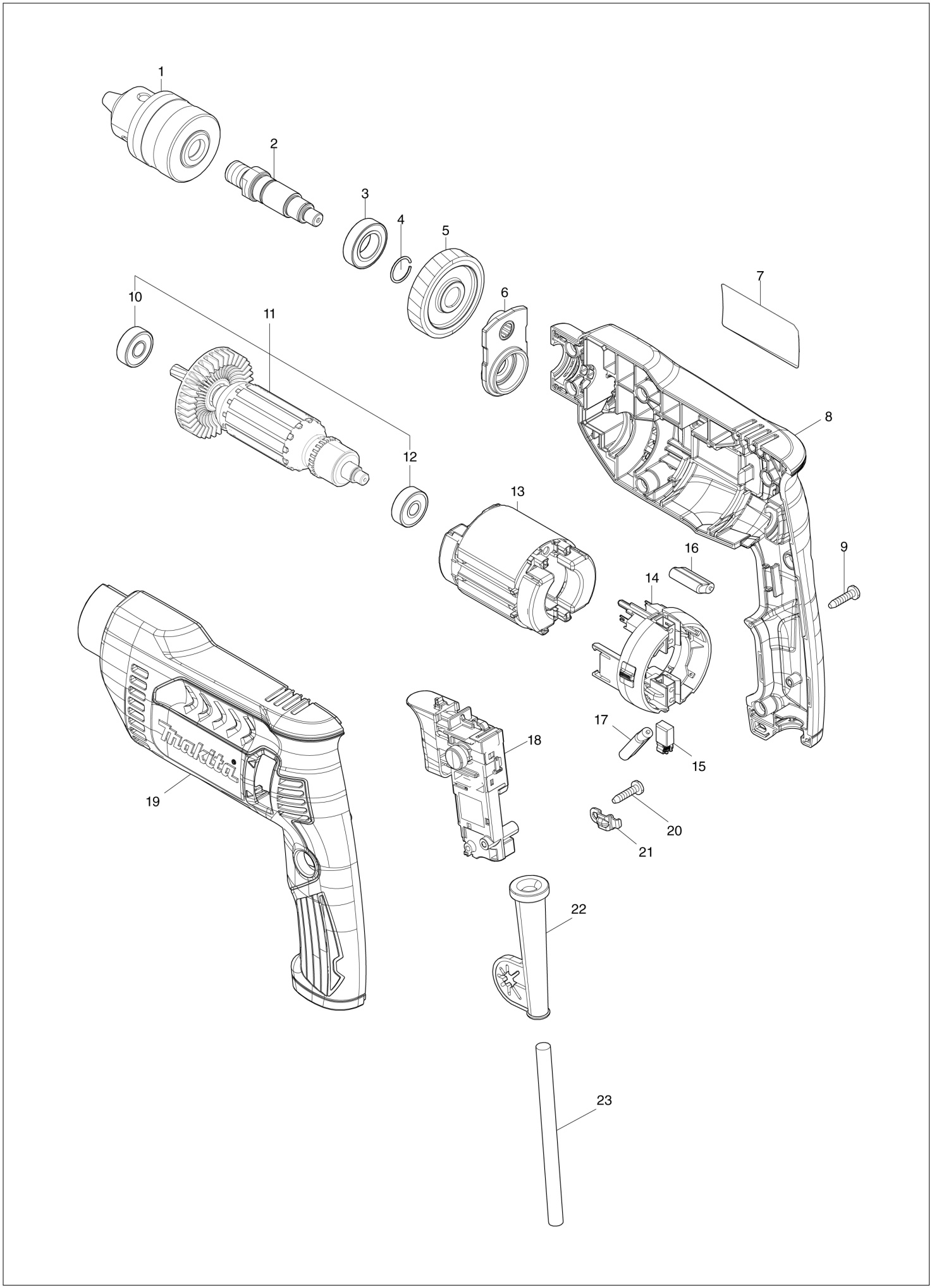

MX	MEXICO

DP4020 / 13MM DRILL

Item	Sub	Parts No.	Parts Description	Qty	I/C	E/C No.	Close No.	Remark
001		763266-0	DRILL CHUCK S13	1				
002		327D32-9	SPINDLE	1				
003		210153-9	BALL BEARING 6902ZZ	1				
004		233925-5	RING SPRING 13	1				
005		227B42-3	HELICAL GEAR 45	1				
006		141V10-1	BEARING BRACKET COMPLETE	1				
007		8147B3-2	DP4020 NAME PLATE	1				
008		1830U0-3	HOUSING SET	1				
	D10		INC. 19					
009		266326-2	TAPPING SCREW 4X18	7				
010		210029-0	BALL BEARING 608ZZ	1				
011		511B12-5	ARMATURE ASSEMBLY 115V	1				
	C10	241881-5	FAN 52	1				
	D10		INC. 10,12					
012		210030-5	BALL BEARING 627ZZ	1				
013		634857-3	FIELD 115V	1				
014		632S42-6	BRUSH HOLDER UNIT	1				
015		195007-0	CARBON BRUSH CB-407	1				
018		650053-5	SWITCH TG853TB-5	1				
019		1830U0-3	HOUSING SET	1				
	D10		INC. 8					
020		266326-2	TAPPING SCREW 4X18	1				
021		687681-3	STRAIN RELIEF	1				
022		682582-0	CORD GUARD	1				
023		664881-2	POWER SUPPLY CORD #18-2-2.0	1				
A01		763453-1	CHUCK KEY S13	1				
E01		638A57-3	LEAD UNIT	2				
F01		1914C4-9	SIDE HANDLE SET	1				

A:DP4020(L)

Interchange
O : Yes
X : No
< : the new part can be substituted for the current.
> : the current part can be substituted for the new.
S : Interchangeable as a set.